Building Guide

Colorado Chapter of the International Code Council

Single Family Residential One Story Detached Garage

How to Use this Guide

Provide two sets of plans, drawn to scale and complete the following (*hint: use graph paper with ¼" squares. Example: ¼" = 1'*): Check with your jurisdiction for additional requirements.

1 Complete this Building Guide by filling in the blanks on page two and four, and indicating which construction details will be used.

2 Provide 2 Plot Plans (site plan) showing dimensions of your project and its relationship to existing buildings or structures on the property and the distance to existing property lines, drawn to scale. See page3.

3 Fill out a building permit application.

The majority of permit applications are processed with little delay. The submitted documents will help determine if the project is in compliance with building safety codes, zoning ordinances and other applicable laws.

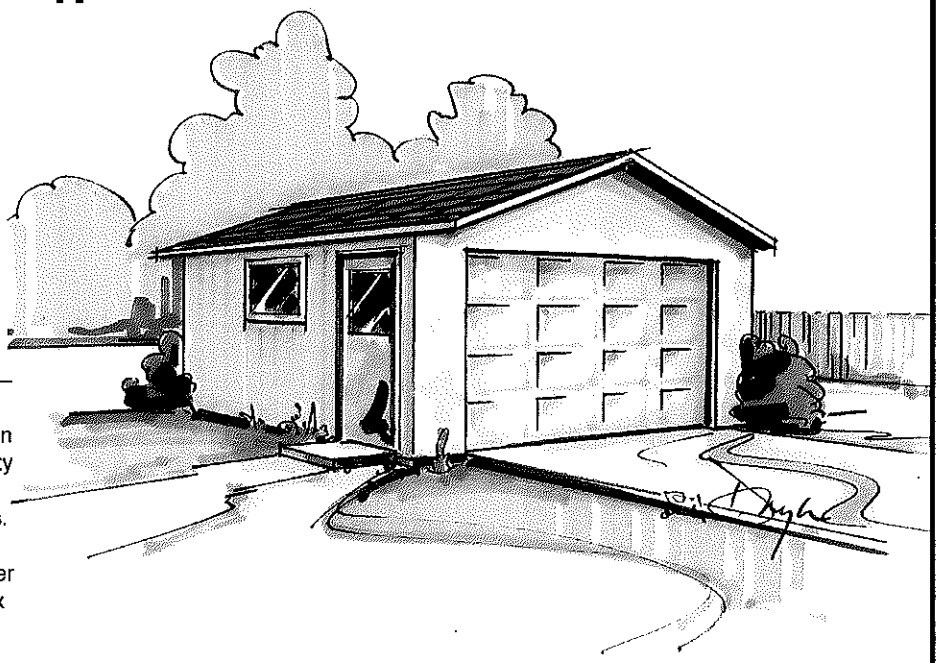

The Colorado Chapter of the International Code Council is a professional organization seeking to promote the public health, safety and welfare to building construction. We appreciate your feedback and suggestions. To obtain a master copy of this building guide, please write to the Colorado Chapter of the International Code Council, P.O. Box 961, Arvada, CO 80001.
http://www.coloradochaptericc.org

This handout was developed by the Colorado Chapter of the International Code Council as a basic plan submittal under the 2012 International Residential Code. It is not intended to cover all circumstances. Check with your Department of Building Safety for additional requirements.

Single Family Residential One Story Detached Garage

Directions

1. Fill in the blanks on pages 2 and 4 with dimensions and materials which will be used to build the structure. Please print legibly.
2. Indicate in the check boxes on page 4 which details from page 5 will be used.

Note: Heated garages will require insulation, such as ceilings, walls, and foundation.

Address: _____

Floor Plan

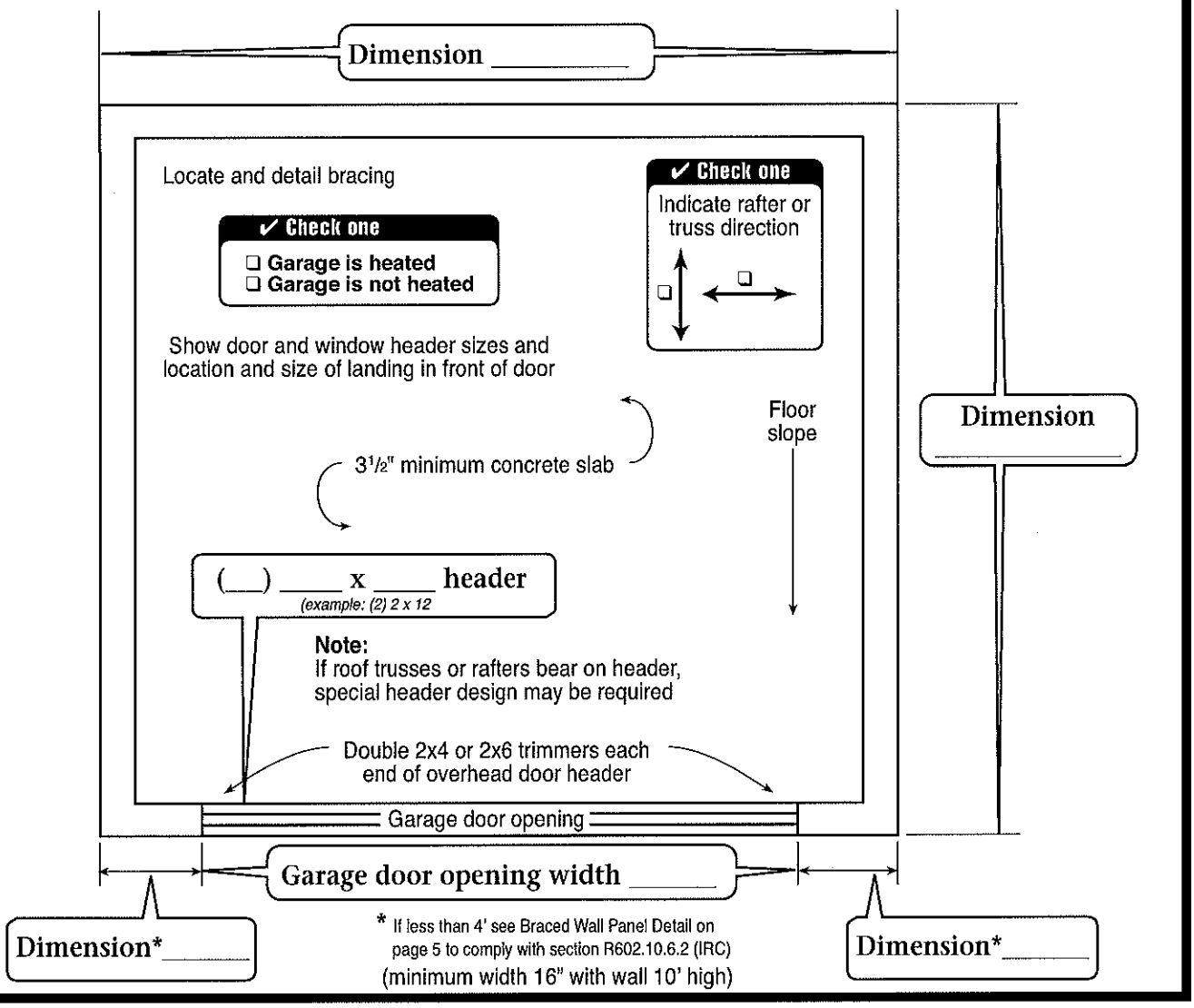

This handout was developed by the Colorado Chapter of the International Code Council as a basic plan submittal under the 2012 International Residential Code. It is not intended to cover all circumstances. Check with your Department of Building Safety for additional requirements.

Single Family Residential One Story Detached Garage

Site Plan Example

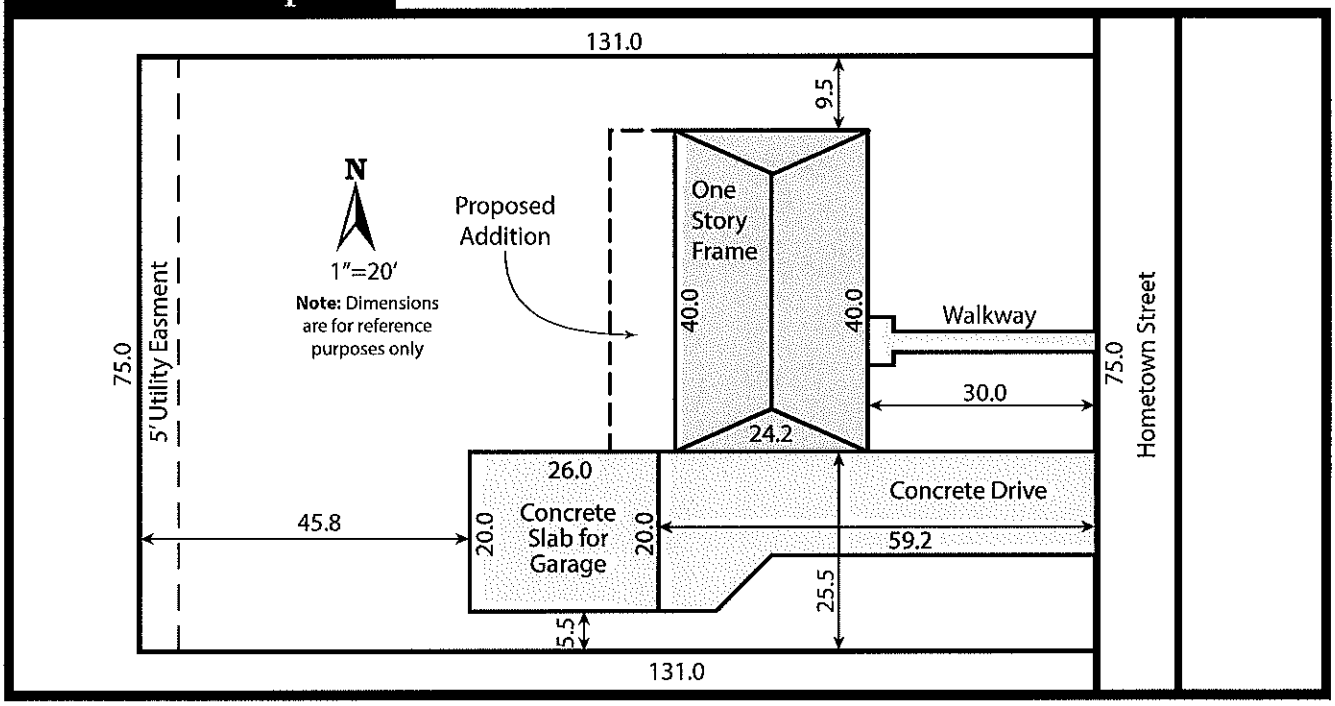

This handout was developed by the Colorado Chapter of the International Code Council as a basic plan submittal under the 2012 International Residential Code. It is not intended to cover all circumstances. Check with your Department of Building Safety for additional requirements.

Single Family Residential One Story Detached Garage

Note: For roofs with slopes less than 4:12, follow manufacturer's instructions for low slope application of roofing material.

❑ Truss or 2x____rafters spaced____" O.C.
(example: Put checkmark in box -or- 2 x 10 Rafters Spaced 24"

Sheathing_____
(example: 1/2" exterior plywood)

Minimum 1x____ridge board
(example: 1 x 12)

Roof covering_____
(example: Class A 3 tab shingles)

Underlayment_____
(example: 1 layer #15 felt)

Building Section

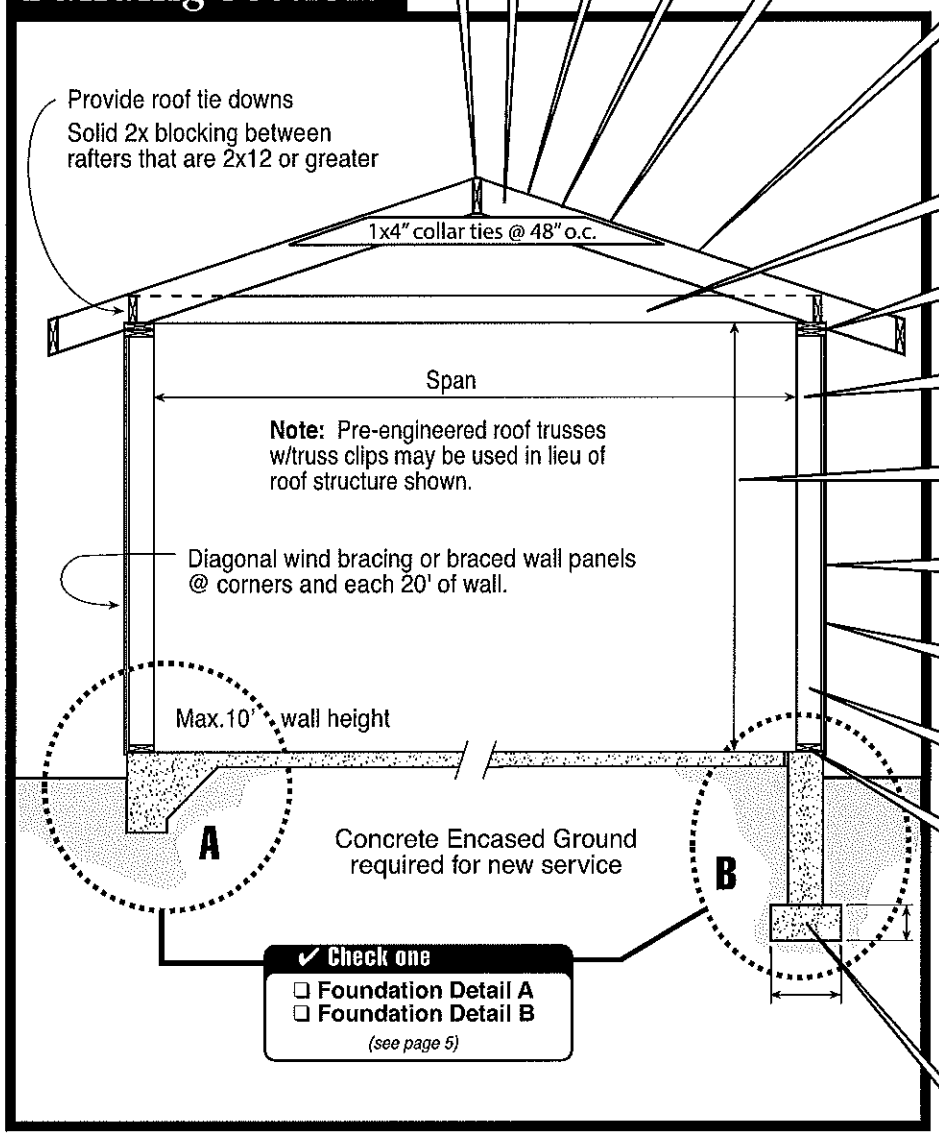

✔ Check one
❑ Foundation Detail A
❑ Foundation Detail B
(see page 5)

12 / pitch ____

Ceiling Insulation _____
(If heated - example: R-38)

2x____ceiling joists @ ____O.C.
(example: 2 x 8 @ 24" O.C.)

Double 2x____top plate
(example: 2 x 6)

Span_____
(example: 23' 5")

Ceiling height_____
(example: 8')

Siding_____
(example: lap or T-111)

Wall sheathing_____
(example: 1/2" exterior plywood)

2x____studs @____ O.C.
(example: 2 x 6 @ 24" O.C.)

Cont. 2x____sill plate
(example: 2 x 6)

Wall Insulation _____
(If heated - example: R-20 Fiberglass Batts)

Foundation Insulation _____
(If heated - example: R-10)

Footing size____x____
(example: 8" x 16")

This handout was developed by the Colorado Chapter of the International Code Council as a basic plan submittal under the 2012 International Residential Code. It is not intended to cover all circumstances. Check with your Department of Building Safety for additional requirements.

Single Family Residential One Story Detached Garage

Foundation Detail A

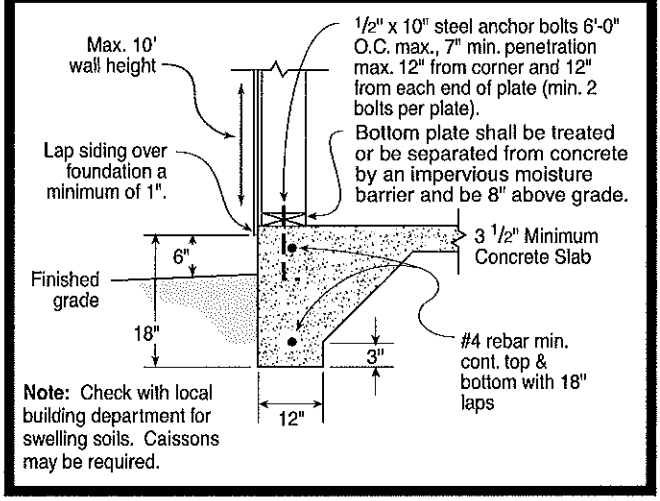

Foundation Detail B

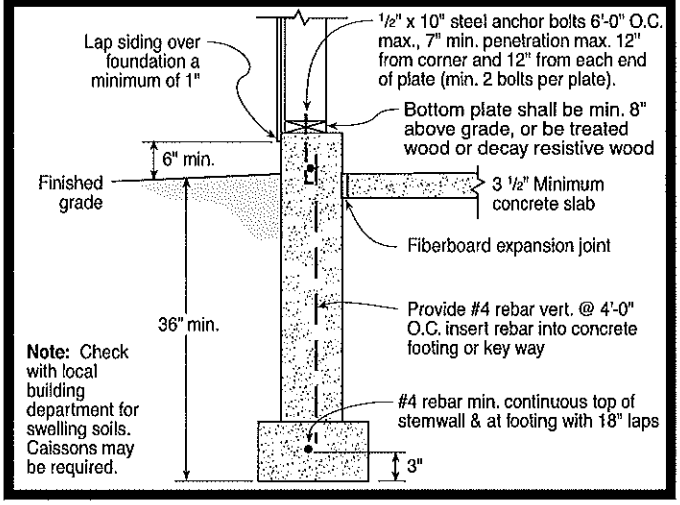

Braced Wall Panel Detail figure 602.10.6.2

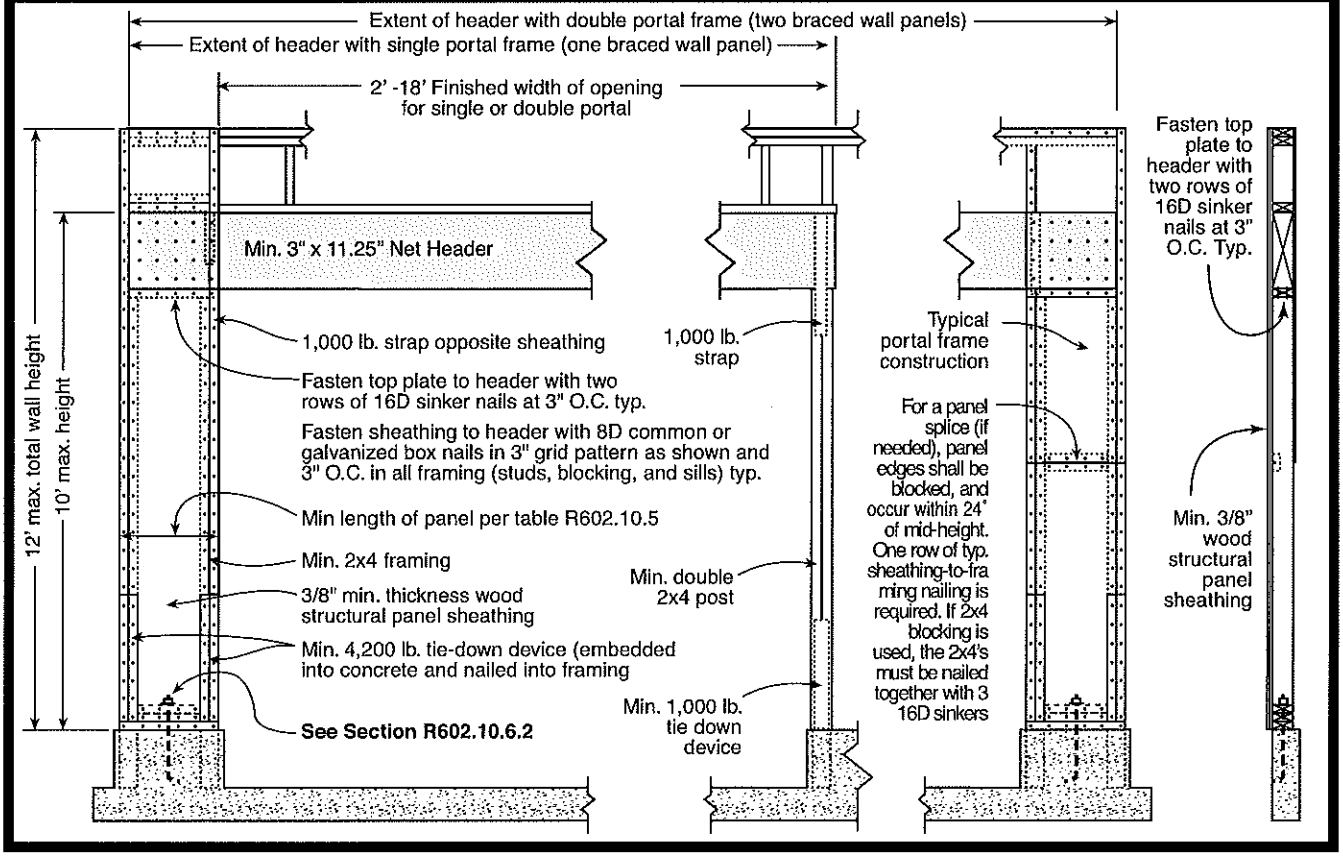

This handout was developed by the Colorado Chapter of the International Code Council as a basic plan submittal under the 2012 International Residential Code. It is not intended to cover all circumstances. Check with your Department of Building Safety for additional requirements.